VIMO ONE

Ergonomic monitor arm

- For monitors up to 32 inches
- Load capacity: up to 7 kg
- VESA 75x100

1
64

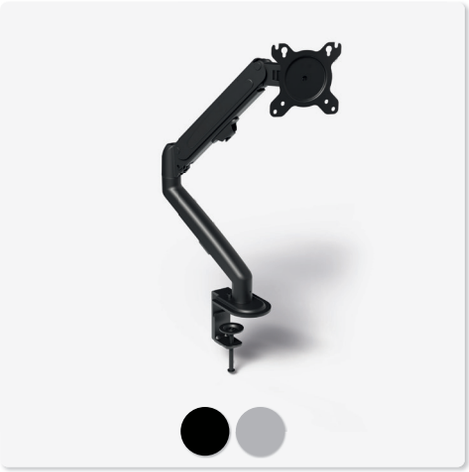

Details

Technical data

Clamp range :	10-80 mm
Tlitable:	from -45° to 90°
Rotates:	up to 180°
Screen Totation:	+180°~-180°
Load capacity:	max. 7 kg

Clamp

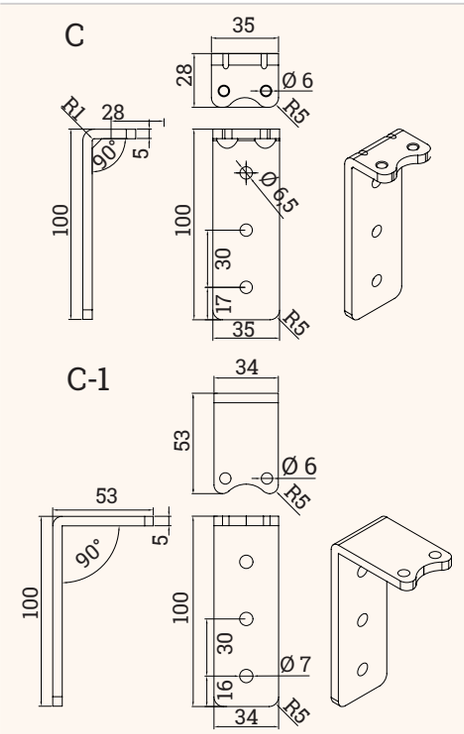

Technical drawings

3D view

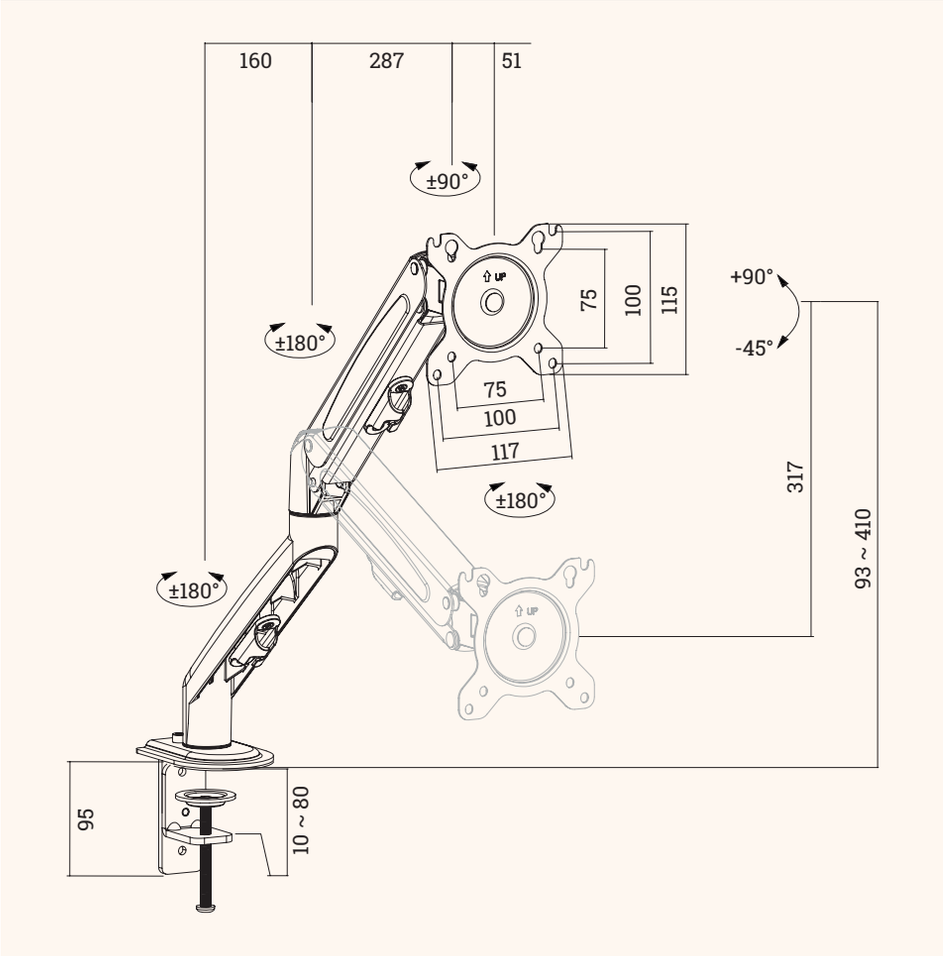

Article	Description	Colour	Item No.
VIMO One	Ergonomic monitor arm	Silver	319 129400
VIMO One	Ergonomic monitor arm	Black	319 129393