EXIT Spot A2C

Ø60 mm built-in multifunctional socket outlet

- Connections: 1 socket (DE/FR), 2 USB-C ports (charging/data), 1 USB-A (charging)
- Range of functions can be extended to include wireless charging via (WLC Spot A2C) accessory







Details

Drill dimension	Ø60 mm
Panel thickness	≤50 mm
Cable length	1,5 m
Electric power max.	3680 W
Operating voltage	230 V
Operating amperage	16 A
Power max.: USB-A	18 W
Power max.: USB-C	30 W
Power max.: USB-A+C	15 W

Technical drawings

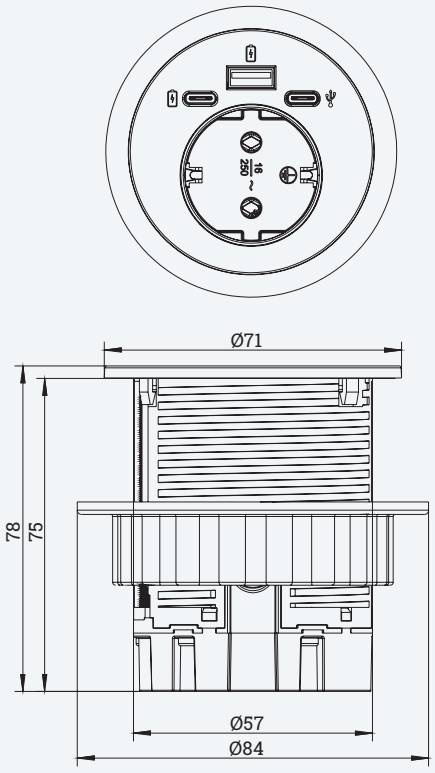

Article	Description	Drill dimension	USB-A	USB-C	Country	Colour	Item No.
EXIT Spot A2C	Multifunctional socket	Ø60 mm	1x charging	1x charging 1x data	1x DE	Black	205 129869
						White	205 129876
					1x FR	Black	205 129855
						White	205 129862

WLC Spot A2C

Accessories for EXIT Spot A2C for wireless charging (Ø80) mm)

- Optional accessories for Exit Spot A2C
- Wireless charging possible in open and closed position
- Power supply directly from Exit Spot A2C via the supplied cable







Details

Drill dimension	Ø80 mm
Panel thickness	≤50 mm
Incl. USB cable	0,2 m
Wireles charging	5-15 W

Technical drawings

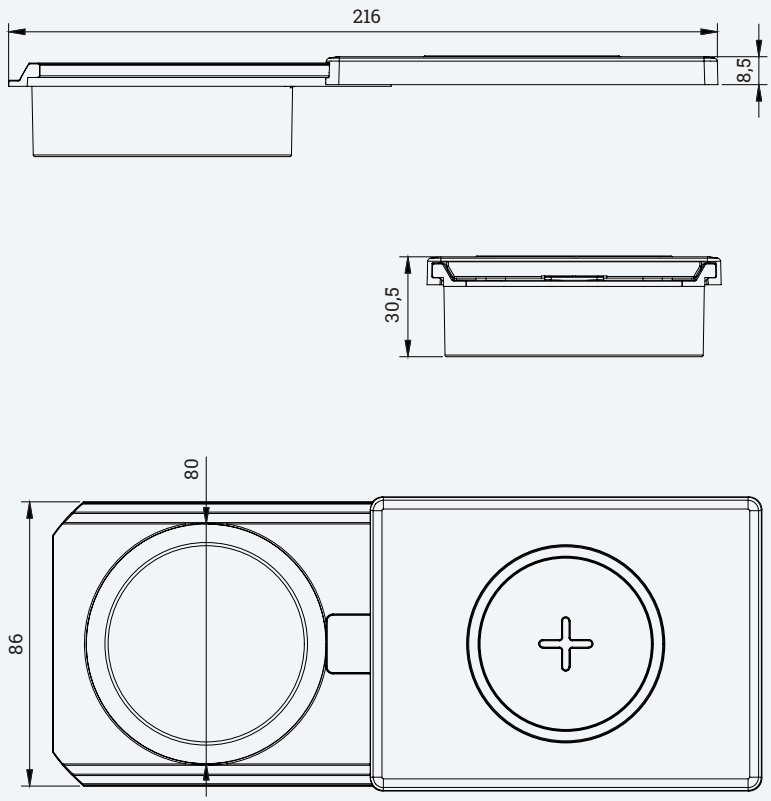

Article	Description	Drill dimension	Country	Colour	Item No.
WLC Spot A2C	Extension for wireless charging	Ø80 mm	1x DE	Black	205 134391
			1x FR	White	205 134398